Question 1

Question 1 **(30 marks)**

(a) $A(4, 2)$ and $B(1, 8)$ are two points in the co-ordinate plane.

(i) Work out the slope of the line AB.

(ii) Work out the distance $|AB|$.

(b) Find the equation of the line through the point $(-2, 7)$ with a slope of $\frac{1}{3}$.
Give your answer in the form $ax + by + c = 0$, where $a, b, c \in \mathbb{Z}$.

(c) The point $(4, 2)$ is shown in each of the two co-ordinate diagrams below.

(i) Draw the line segment through the point $(4, 2)$ with a slope of 2 on the co-ordinate diagram below, with the range $-2 \leq y \leq 6,\ y \in \mathbb{R}$.

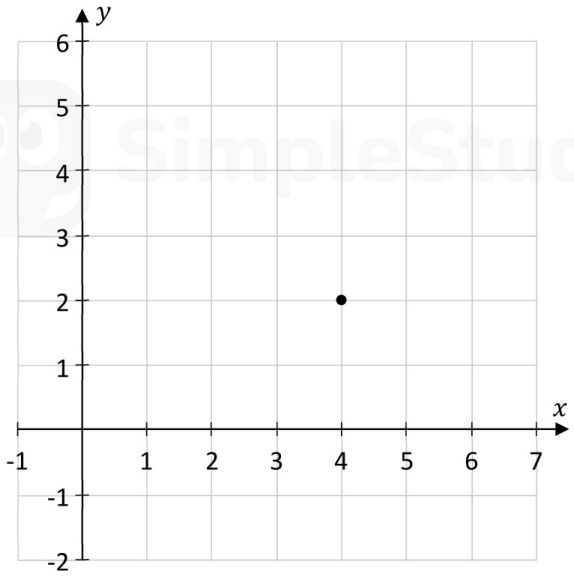

(ii) Draw the line segment through the point $(4, 2)$ with a slope of $-\frac{2}{3}$ on the co-ordinate diagram below, on the domain $-1 \leq x \leq 7,\ x \in \mathbb{R}$.

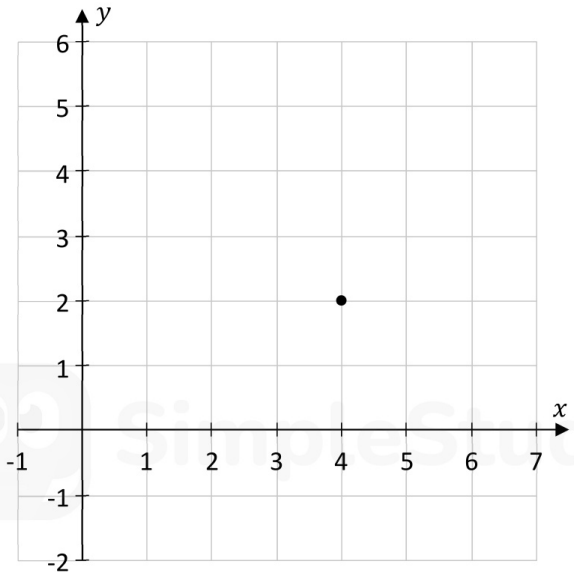

Question 2

Question 5 **(30 marks)**

The diagram below (not to scale) shows a square with sides of length 12 cm.
The circle c is inside the square, and touches the four sides of the square.
The circle k is outside the square, and goes through the four corners of the square.

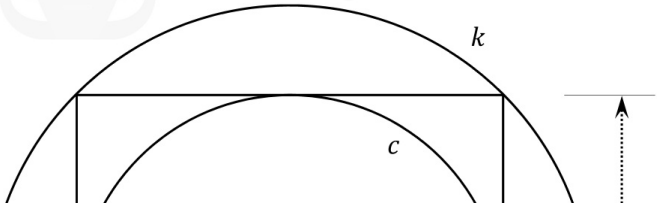

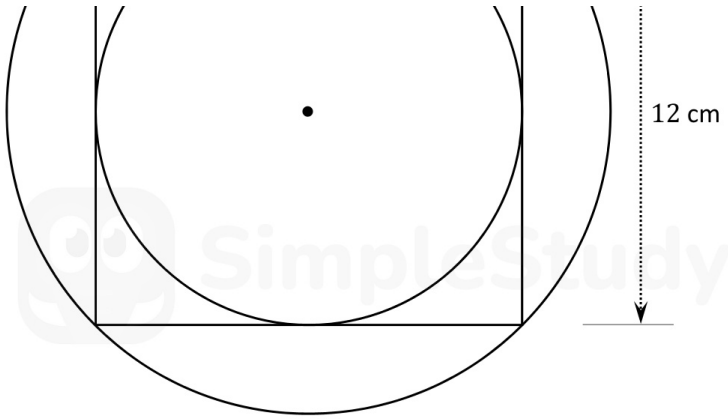

(a) Find the length of the radius of the circle c.

(b) Work out the area of the circle c. Give your answer correct to 2 decimal places.

(c) Work out the percentage of the area of the square that is taken up by the circle c, correct to the nearest percent.

(d) Show that the radius of the circle k is $8{\cdot}49$ cm, correct to 2 decimal places.

(e) Work out the circumference of the circle k, correct to 2 decimal places.

Question 3

Question 4 **(30 marks)**

Rohan plays basketball.

(a) During a match, Rohan takes a number of free throws.
He scores 70% of his free throws, on average.

Assume that scoring his free throws are independent events.

(i) Find the probability that he scores his first 3 free throws.

(ii) Find the probability that he scores exactly 2 of his first 3 free throws.

(iii) Give one reason why scoring his free throws might **not** be independent events.

(b) The table below shows the number of games in which Rohan scored each of the given number of points. For example, Rohan scored 12 points in 3 games.

Number of points	0	6	8	10	12	16
Number of games	4	5	4	2	3	1

Work out Rohan's mean number of points per game, based on the values in the table.
Give your answer correct to 2 decimal places.

Question 4

Question 1 **(30 marks)**

Parts of the lines AC and BC are shown in the co-ordinate diagram below (not to scale).

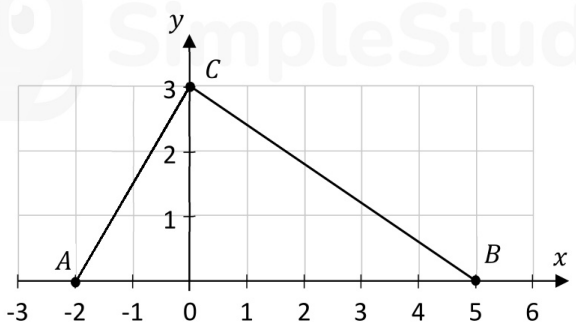

(a) **(i)** Find the slope of AC.

(ii) By using slopes, investigate if AC is perpendicular to BC. Justify your answer.

Answer: (Tick (✓) **one** box only)

AC **is** perpendicular to BC ☐

AC is **not** perpendicular to BC ☐

(b) The triangle LMN is shown on the co-ordinate diagram below (not to scale).
The point M has co-ordinates $(9, 1)$.
The triangle LMN is symmetrical about the y-axis.

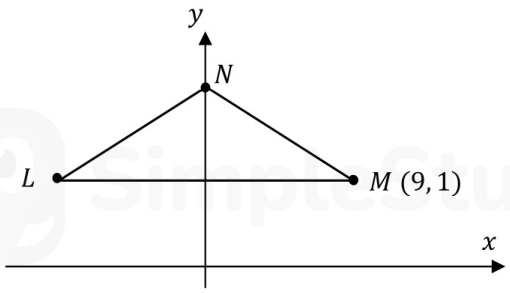

(i) Find the length $|LM|$.

(ii) Write down the equation of the horizontal line LM.

(iii) The line NM has equation $x + 4y - 13 = 0$, where $x, y \in \mathbb{R}$.

Use this equation to find the co-ordinates of the point N.

$N = (\quad , \quad)$

Question 5

Question 6 **(30 marks)**

(a) The circle c is shown in the diagram below (not to scale). Its centre is at the point O. The points A, B, and D lie on the circle, and $[AB]$ is a diameter of the circle.

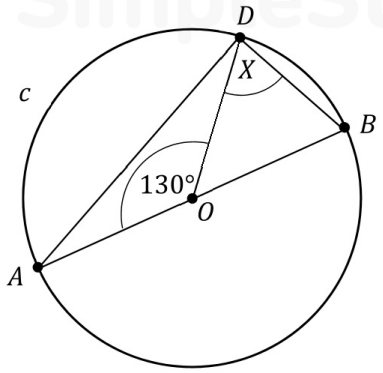

(i) Write down $|\angle ADB|$, the size of the total angle at the point D.

(ii) $|\angle AOD| = 130°$. Work out the size of the angle marked X in the diagram.

(iii) The radius of the circle is 18 cm. Find the length of the arc AD.
Give your answer in cm, in terms of π.

(b) Two statements, **A** and **B**, are shown below.

For each statement, put a tick (✓) in the correct box to show if it is true or false.
Give a reason for your answer in each case.

(i) **Statement A**: If two triangles are similar, then they **must** be congruent.

This statement is: (tick **one** box only)	true	false
	☐	☐

Reason:

(ii) **Statement B**: If two triangles are congruent, then they **must** be similar.

This statement is: (tick **one** box only)	true	false
	☐	☐

Reason:

Question 8 **(50 marks)**

The top of a particular lighthouse is in the shape of a hemisphere on top of a cylinder.
The hemisphere and the cylinder both have a radius of 3 m.

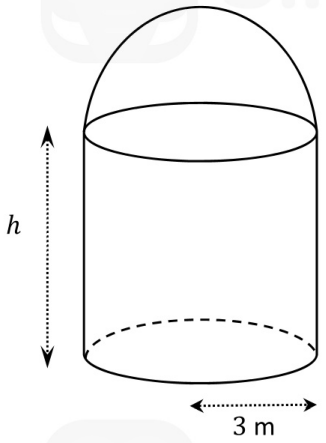

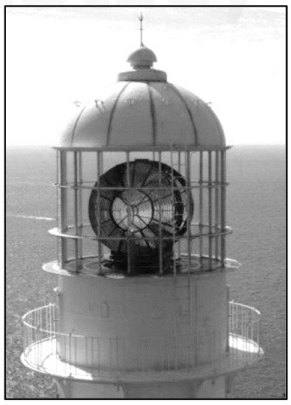

(a) **(i)** Find the volume of the **hemisphere**. Give your answer in m^3 in terms of π.

(ii) The volume of the **cylinder** is 36π m^3.
Work out h, the height of the cylinder.

(b) The diagram on the right below shows part of the base of the lighthouse (not to scale).
It is in the shape of a cone of radius 7·5 m, from which the top part has been removed, leaving a horizontal circle of radius 3 m.

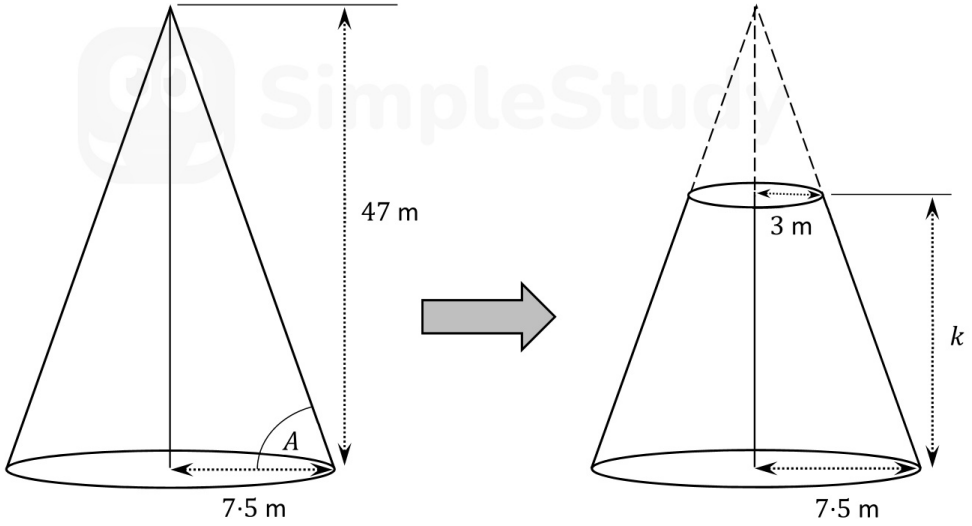

(i) The height of the cone **before** the top part is removed is 47 m.
Work out the size of the angle at the base of the cone, marked A in the diagram above.
Give your answer correct to the nearest degree.

(ii) Find the distance marked k on the diagram, the height **after** the top part is removed.

(c) Assume that the Fastnet lighthouse can be seen from anywhere within a circle of radius 50 km.

(i) Work out the area of the circle within which the Fastnet lighthouse can be seen.
Give your answer correct to the nearest km^2.

(ii) 50 km $= 27$ nautical miles.
Use this to work out how many km are in 1 nautical mile.
Give your answer correct to 4 significant figures.

Question 7

Question 7 **(50 marks)**

(a) The following table shows the age profiles of all of the people in Ireland, aged between 15 and 65, who subscribed to an online streaming platform.

Age Group	15 – 25	25 – 35	35 – 45	45 – 55	55 – 65
Percentage (%) of Subscribers	24	27	25	16	8

Note: 25 – 35 means 25 years and over but less than 35 years. Source: https://www.statista.com

(i) Draw a **Histogram** to represent the data.



(ii) In a survey of 1000 subscribers, aged between 15 and 65, how many people would you expect to be between 25 years and 55 years?

(iii) Use the table or the histogram to write down the age group which contains the median age.

Age Group:

(iv) Use the mid-interval values of the groups in the table to estimate the mean age of the subscribers. Give your answer correct to one decimal place.

(b) Prior to the COVID-19 pandemic, *Netflix* held the largest share of the online streaming market with 65% of all streaming subscribers in the 15 to 65 age group. Aiden thought that this percentage might have changed during the pandemic and surveyed a sample of subscribers in this age group to get data.
He then carried out a Hypothesis Test to test his theory.

(i) If 540 people responded to his survey, calculate the margin of error of his survey. Give your answer as a percentage, correct to one decimal place.

(ii) His survey revealed that 372 of the responders said they now have a *Netflix* account. Use your answer to **Part (b)(i)** above to create a 95% confidence interval for the percentage of the population that have a *Netflix* account.

(iii) Use your answer to **Part (b)(ii)** above to conduct the Hypothesis Test, at the 5% level

of significance to test Aiden's claim that the percentage of subscribers to *Netflix* had changed. State clearly your null hypothesis, your alternative hypothesis and give your conclusion in the context of the question.

Question 8

Question 8 **(50 marks)**

(a) A fish shop has a vertical sign outside its front door.

In the diagram below, the sign is represented by $[FH]$, with $|FH| = 3$ m.

A cable is tied at the top of the sign, F, and is secured at the point G on the horizontal ground. G is $1{\cdot}4$ m from the base of the sign H, as shown in the diagram below (not to scale).

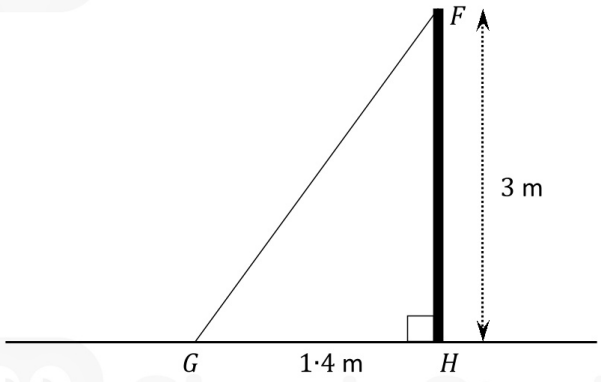

(i) Use the Theorem of Pythagoras to find the length of the cable, $|GF|$.
Give your answer in metres, correct to 1 decimal place.

(ii) Show that the size of the angle $\angle FGH = 65°$, correct to the nearest degree.

(iii) A second cable from G is tied to the sign, at the point K, where K is half way up the sign $[FH]$.

Mairéad says that the size of the new angle $\angle KGH$ is half the size of the angle $\angle FGH$.

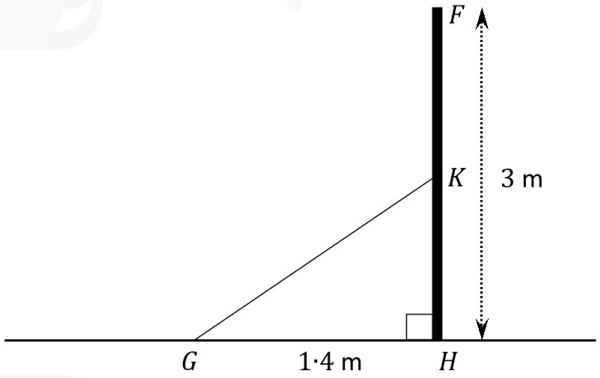

Is Mairéad correct?
Use calculations to support your answer.

Answer: Yes ☐ No ☐
(Tick (✓) **one** box only)

Calculations:

This question continues on the next page.

(b) The fish shop has a logo with some measurements as shown in the diagram below (not to scale).

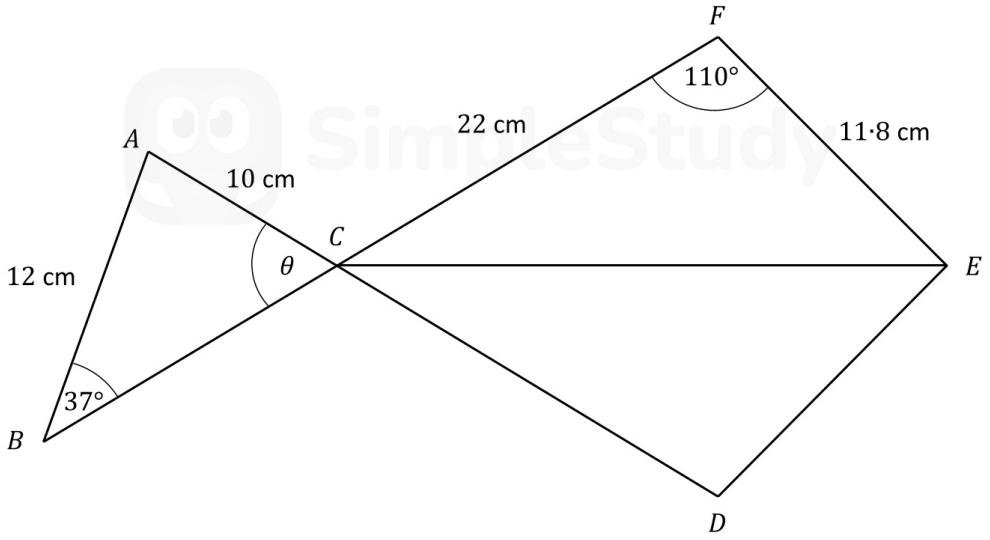

(i) $|AB| = 12$ cm, $|AC| = 10$ cm, and $|\angle ABC| = 37°$.

Work out the size of the angle θ, where θ is the angle $\angle BCA$.
Give your answer correct to the nearest degree.

(ii) $|CF| = 22$ cm, $|EF| = 11{\cdot}8$ cm, and $|\angle EFC| = 110°$.

Use the cosine rule to work out the distance $|CE|$.
Give your answer correct to 1 decimal place.

(iii) $CDEF$ is symmetrical about $[CE]$.
Work out the **total** area of $CDEF$.
Give your answer correct to the nearest cm^2.